Modified PIBETA Fast Trigger - D. Pocanic 7. Feb. 1997.

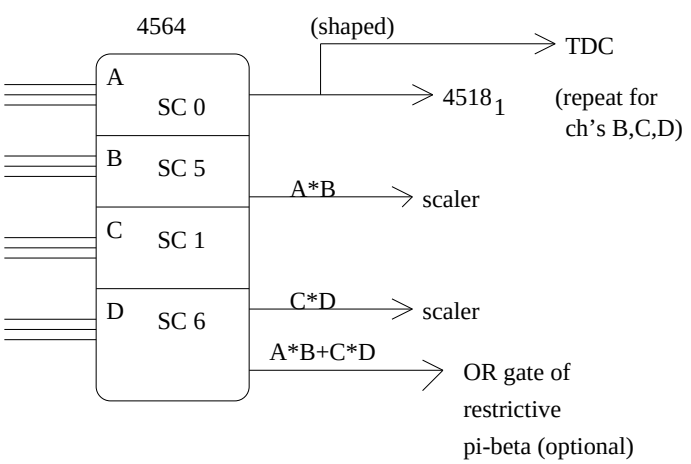

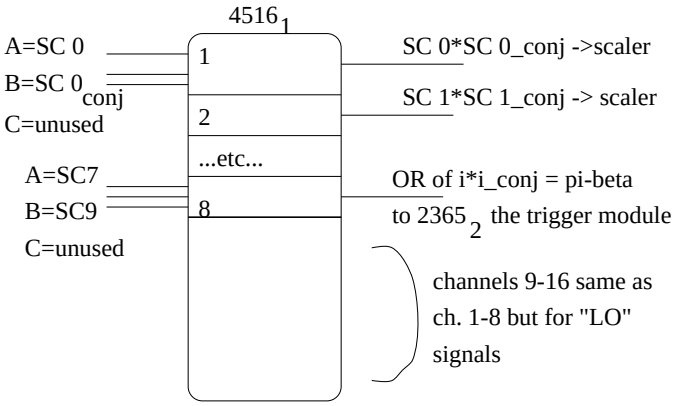

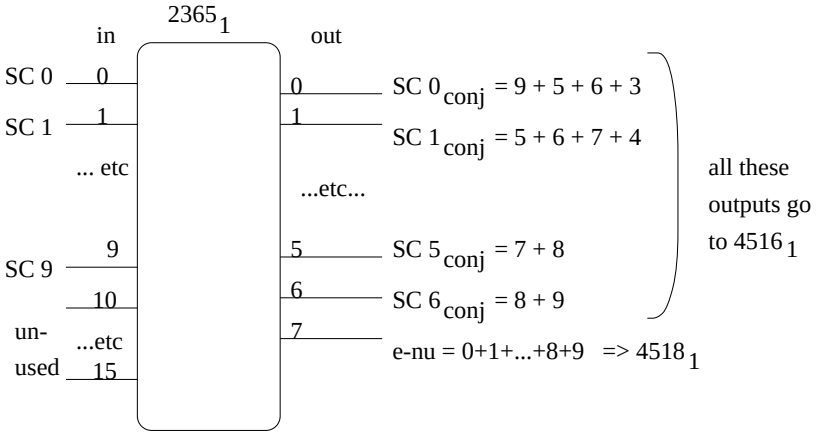

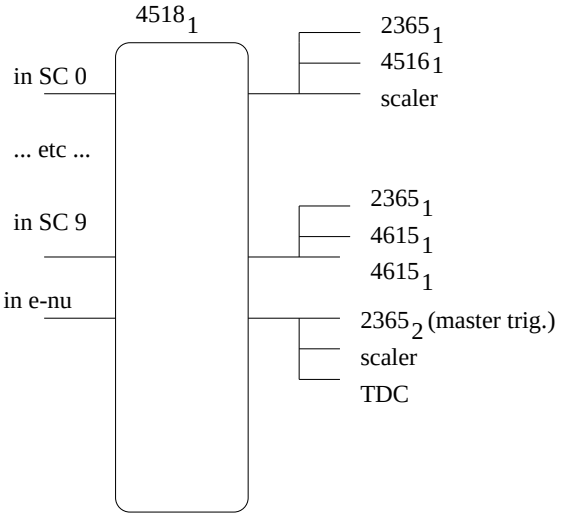

Not drawn here: the unit 2365_2 (master trigger unit)which has the same inputs and outputs as the MLU trigger module in the original scheme