PMT DIVIDER FOR EMI 9822QKB

HIGH CURRENT 1994 VERSION

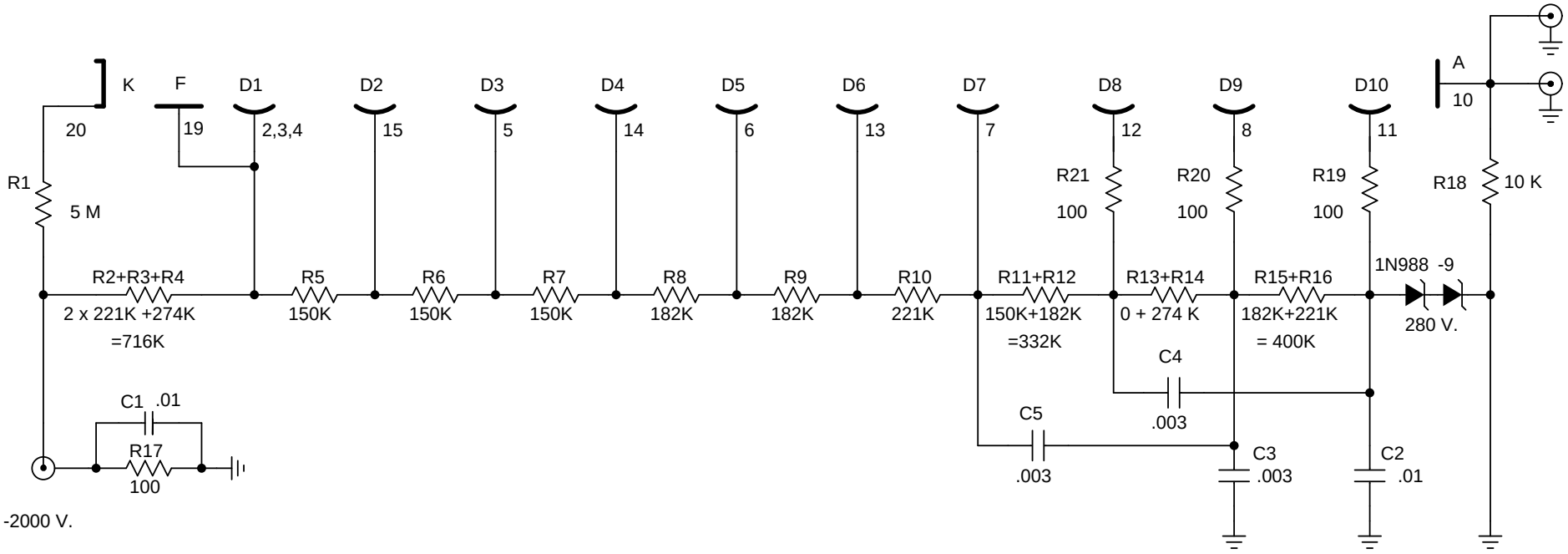

RESISTORS ARE 1% 1/4 W. METAL FILM

DIVIDER CURRENT IS 615 MICROAMPS. AT -2000 V.